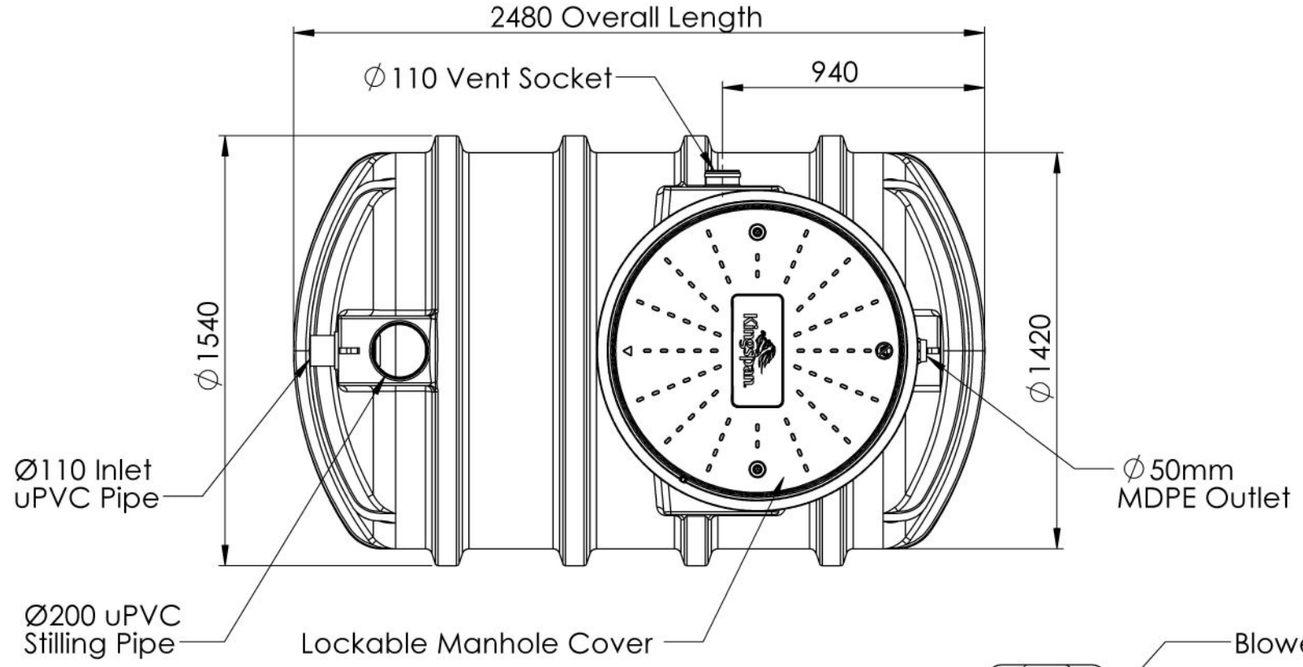

Notes :

1. Inlet is Ø110 mm. Suitable reducers should be used to step down from bigger pipework. Supplied by others.
2. OUTLET is Ø50 mm outside diameter MDPE compression fitting.
3. Units invert is adjustable by trimming external riser to required height. Selection of correct invert is key and must be suitable for drainage and ground levels on site.
4. Ext neck kit available for deeper inverts up to a maximum invert of 1400mm. See extension neck drawing for assembly details.
5. It is important to read and understand installation operation and maintanance guidelines before attempting to install this unit.
6. Vent pipe connection is supplied but vent runs and stacks are supplied by others.
7. Air hose for tank internals is supplied with blower housing and is run through the vent.
8. Cable for the outlet pump is run through the vent.
9. Tank Weight (Empty) - 175 kg

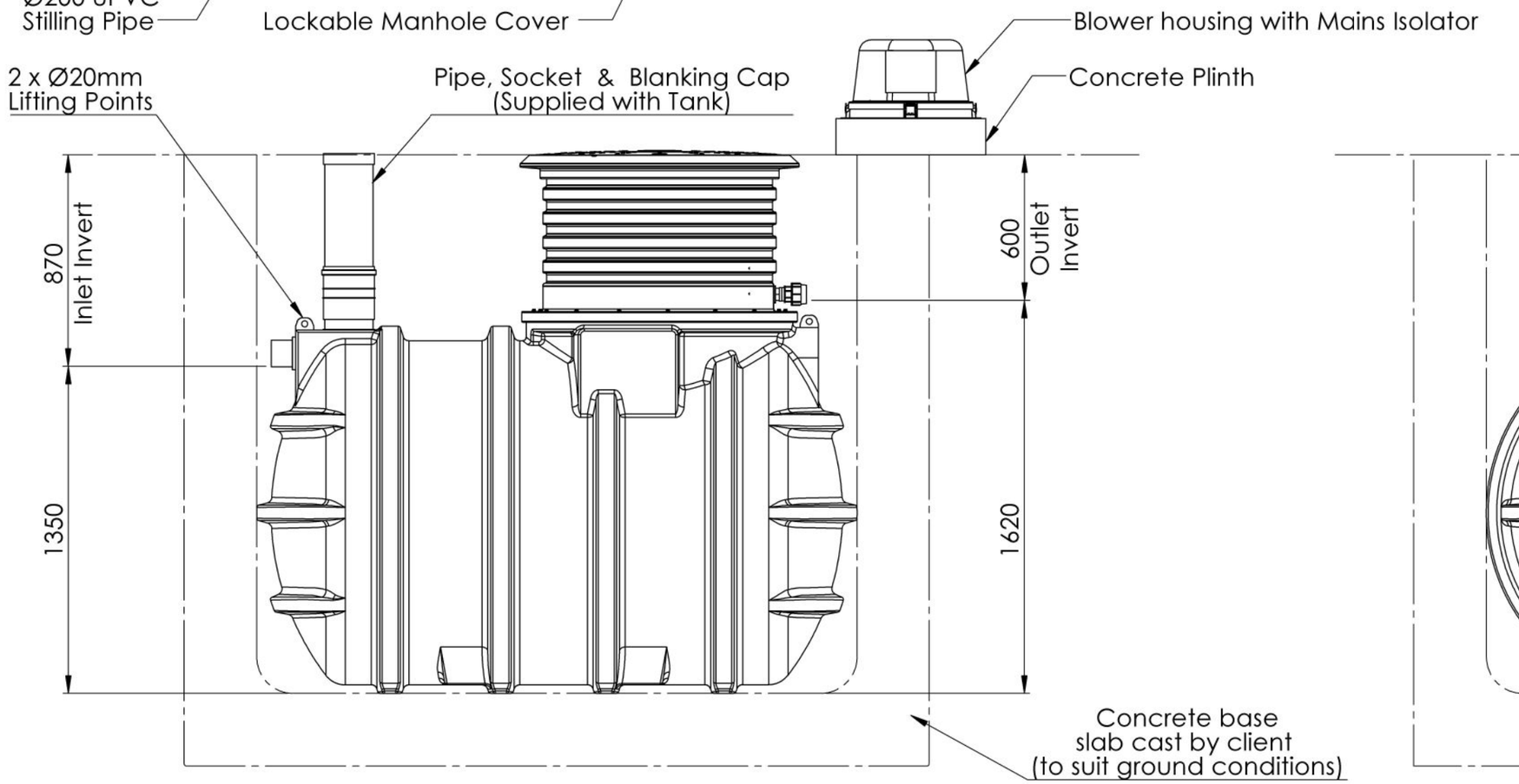

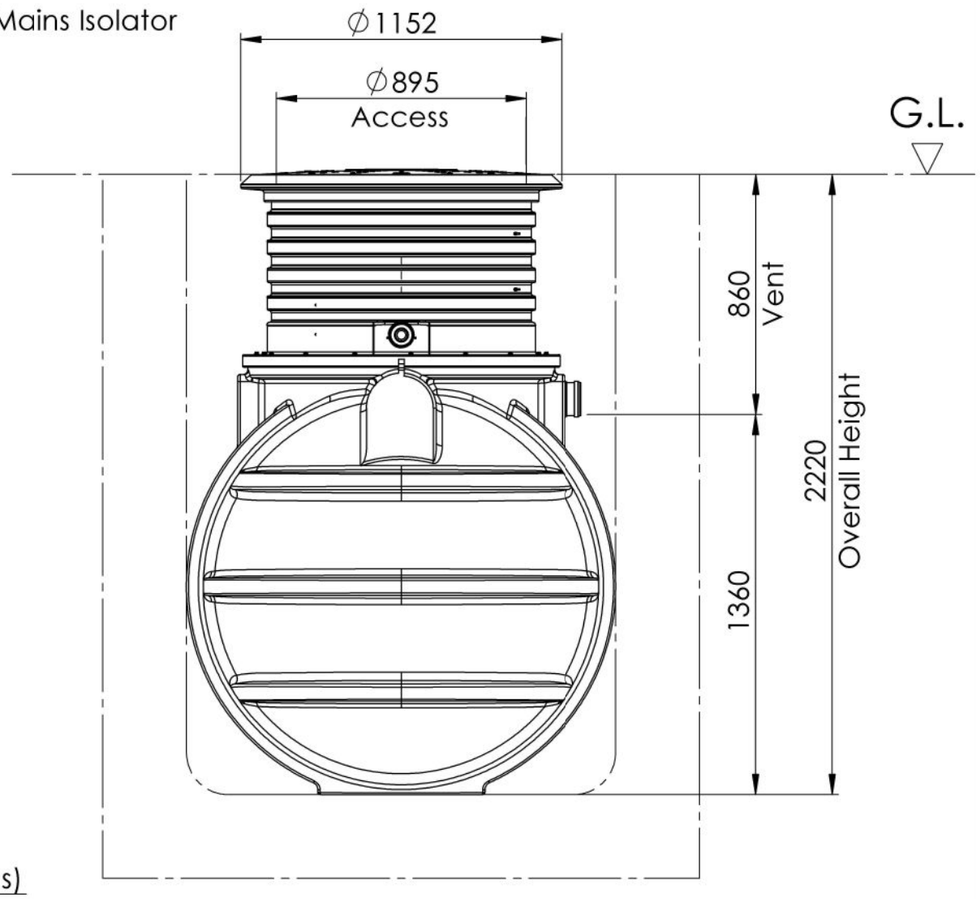

Please check with Kingspan Water & Energy for the latest Issue of the drawing				
Issue	Date	Drawn By	Approved By	Description
01	15/05/2024	J.Belovic	D.M	Initial Issue

All Dimensions In mm | Scale: Do Not Scale | Third Angle Projection

A:\Dept\Wastewater\Engineering\Engineering Projects\983A - BioTec+ (BioAir MKII)\Models\BioTec+2\IPS\DS1474P

Modelled By :	Tolerance (unless stated) :
Weight : kg	Thickness :
Material :	Surface Area : m²

Kingspan Water & Energy reserve the right to alter the details of this drawing without prior notice. This drawing is copyright and may not be reproduced or used without the written permission of Kingspan Water & Energy

Drawing : DS1474P

BioTec+ 2 IPS Sales Drawing

Kingspan